Docusign Envelope ID: FDB89ED2-3BE8-48AF-BB83-F82AAF734FF2

8/26/21

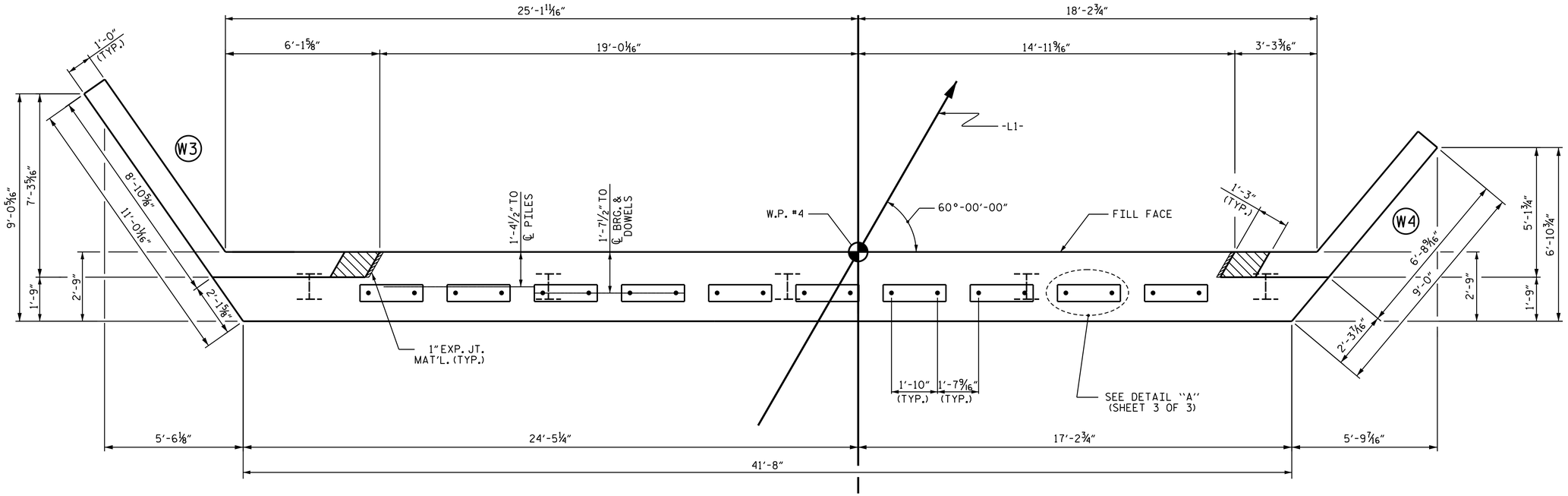

PLAN

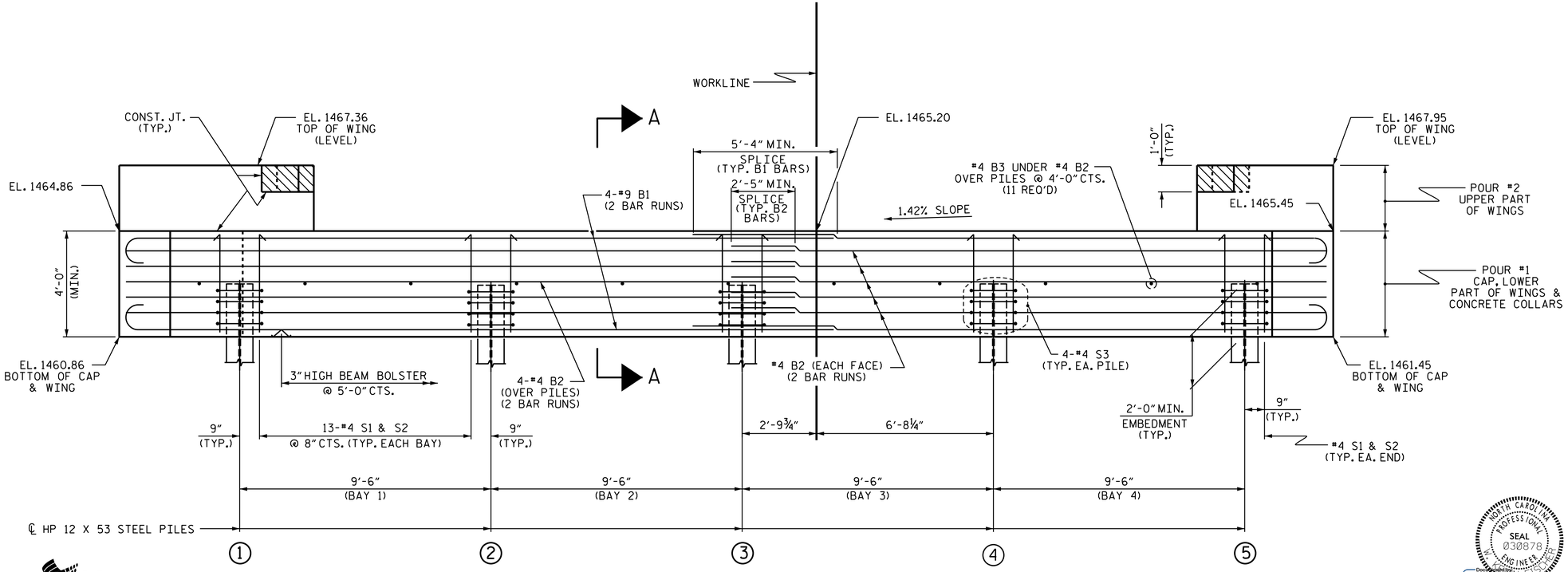

ELEVATION

WINGS NOT SHOWN FOR CLARITY.
FOR SECTION A-A, SEE SHEET 3 OF 3.
CONCRETE COLLARS FOR STEEL PILES NOT SHOWN IN PLAN AND ELEVATION VIEWS FOR CLARITY.
SEE "CORROSION PROTECTION FOR STEEL PILES DETAIL", SHEET 3 OF 3.

NOTES

STIRRUPS IN CAP MAY BE SHIFTED AS NECESSARY TO CLEAR DOWELS.

THE CONCRETE IN THE SHADED AREA OF THE WING SHALL BE POURED AFTER THE VERTICAL CONCRETE BARRIER RAIL IS CAST IF SLIP FORMING IS USED.

FOR PILE SPLICE DETAILS, SEE SHEET 3 OF 3.

FOR WING DETAILS, SEE SHEET 2 OF 3.

TOP OF PILE ELEVATIONS

1	1462.89
2	1463.03
3	1463.16
4	1463.30
5	1463.43

PROJECT NO. BP14-R038
POLK COUNTY
STATION: 13+52.50 -L1-

SHEET 1 OF 3

STATE OF NORTH CAROLINA
DEPARTMENT OF TRANSPORTATION
RALEIGH

SUBSTRUCTURE
END BENT 2

NORTH CAROLINA PROFESSIONAL SEAL 030878 ENGINEER

DocuSigned by: Kevin Fischer 9/16/2025
339FA2D658AB4DC...

VHB Engineering NC, P.C. (C-3705)
940 Main Campus Drive, Suite 500
Raleigh, NC 27606

DRAWN BY : C.P. MALAGON DATE : 08/2025
CHECKED BY : E.C. PHELPS DATE : 08/2025
DESIGN ENGINEER OF RECORD: W.K. FISCHER DATE : 09/2025

DOCUMENT NOT CONSIDERED FINAL UNLESS ALL SIGNATURES COMPLETED

REVISIONS						SHEET NO.
NO.	BY:	DATE:	NO.	BY:	DATE:	S-26
1			3			TOTAL SHEETS
2			4			32

9/15/2025
c:\bms\vhb-pw-01\d0248436\401_017_BP14-R038_EB04.dgn
cmalagon